REVISIONS			
REV	DESCRIPTION	DATE	APPROVED
-	-	-	-

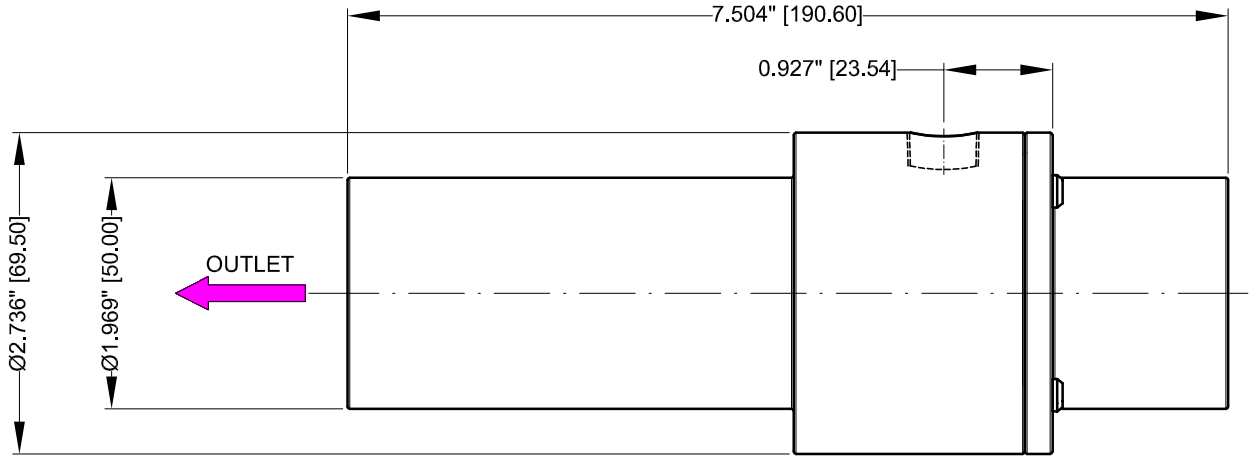

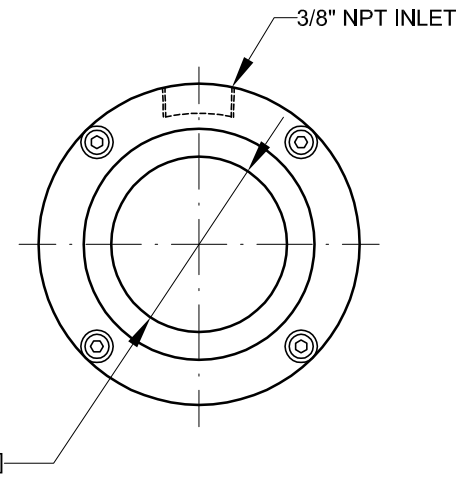

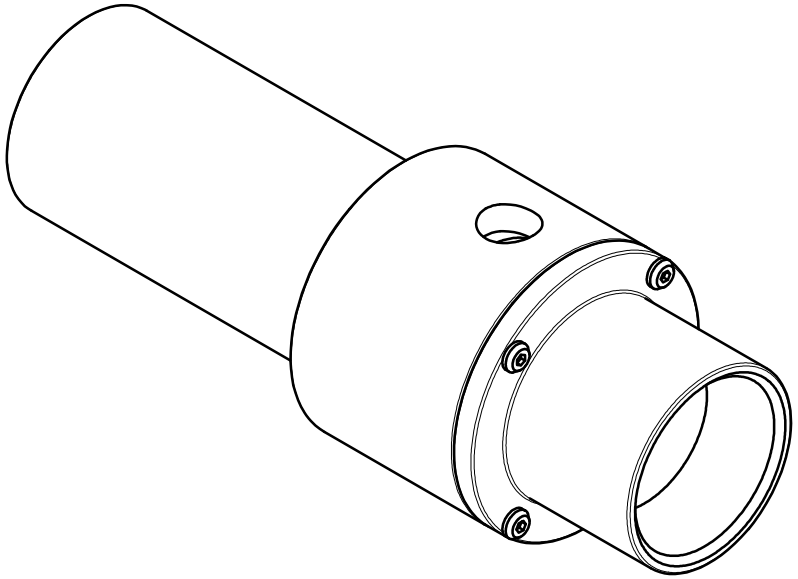

THIRD ANGLE PROJECTION	-	-	-	-	
MATERIAL: AL	-	-	-	-	
	-	-	-	-	
	-	-	-	-	
	-	-	-	-	
	-	-	-	-	
FINISH	-	-	-	-	
	NEXT ASSEMBLY	USED ON	QTY PER ASSY	PART NO	
	PART NO				

REQUIREMENTS—UNLESS OTHERWISE SPECIFIED

GENERAL

1. DIMS ARE IN INCHES (MM)
2. DIMENSIONING AND TOLERANCING IN ACCORDANCE WITH ANSI Y14.5 (1982)
3. MACHINE FINISH 125 MICRO INCH RMS
4. INTERNAL RADII .015
5. BREAK SHARP CORNERS .005 TO .015

LIMITS

1. LINEAR DIMS.
   .XXX = .005
   .XX = .010
   .X = .030
2. ANGLES = ± 1/2°
3. RUNOUT .010 TIR
4. HOLES IN ACCORDANCE WITH AND 10387

CONTRACT NUMBER	–
CLIENT	–
CONTRACTOR	–
DRAWN: CHIRAG.S	DATE: 09/10/2014
DESIGN: –	CHECKED: ASHISH
PROJECT: –	Q.A.: –
STRESS: –	MANUFACTURING: –
THERMAL: –	MATERIALS: –
MECHANISM: –	ELECTRICAL: –

NEX FLOW AIR PRODUCTS CORP.
10520 YONGE STREET, UNIT 35B-220, RICHMOND HILL, ON L4C 3C7
TEL.: (416) 410-1313 & FAX: (416) 410-1806 www.nex-flow.com

TITLE: X-STREAM SUPREME PNEUMATIC CONVEYOR

SIZE	CAGE CODE	DRG. NAME	RELEASE	REV
C	–	ASSEMBLY OUTLINE	P	–

SCALE	DRG. NO	SHEET	OF
1:1	XSPC38-OL	1	1